AMOB GROUP

FULLY ELECTRIC

TUBE BENDING MACHINES

amobgroup.com

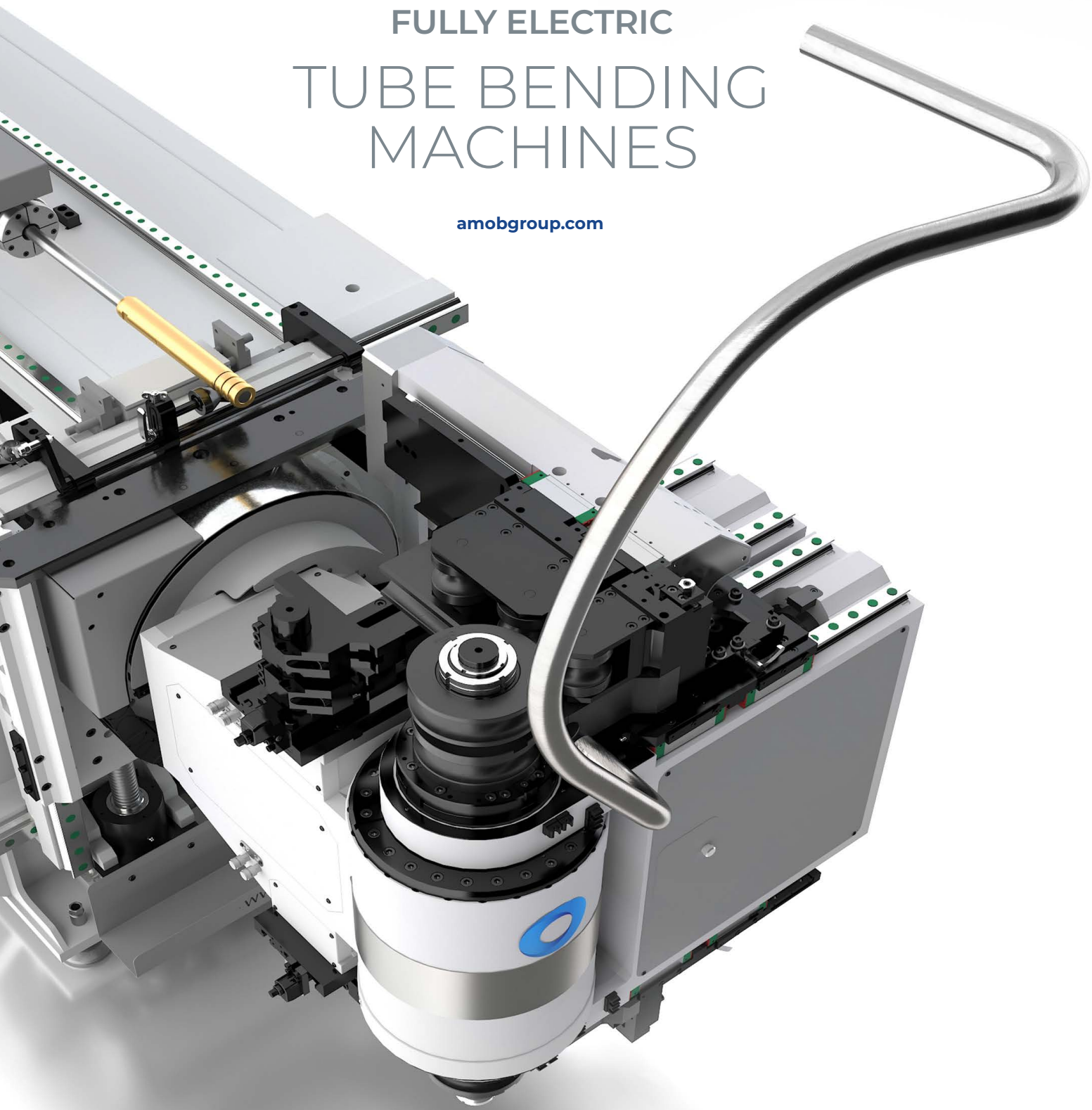

"One day I will have friends in the four corners of the world, friends that the others tend to call customers"

Antonio Martins de Oliveira Barros

AMOB Founder
Since 1960

40 000 m² of **industrial areas**	More than **60 years of experience**	**100% made in Portugal**	Over **200 employees**

AMOB GROUP

OUR HISTORY SINCE 1960

In the 1950's, António Martins de Oliveira Barros began his career in a highly respected factory, surrounded by machines and tools. Soon, having worked in multiple departments of this factory, he rapidly developed skills that allowed him to assist owners of agricultural machinery within his community with technical expertise.

One such job required the use of a small, manual tube bender that was both impractical and difficult to use. This obstacle inspired Mr. Barros to redesign the machine and manufacture a better one.

Once finished, he was so proud of the result that he promised to himself that he would do another 10 machines just like the one he finished so he could offer them to small local companies that had similar needs. Without noticing António Martins de Oliveira Barros was in that moment setting the ground work of what would become AMOB, that after 60 years and already in its third management generation, continues to develop products with the same ideals in its DNA – simple products that are easy to use and intuitive operation.

Over the years, the space dedicated to its activity has grown to its current facilities, with around 40 000 m² of covered area equipped with the most update production equipment.

AMOB has progressively become the world's leading manufacturer of metalworking technologies, providing one of the biggest ranges of specialized equipment for the tube and pipe bending industry worldwide.

AMOB GROUP

WELCOME TO THE NEXT LEVEL OF TUBE BENDING MACHINES

Environmentally friendly bending machines!

Ecological, silent, with the most intuitive software on the market and capable of reducing energy consumption by up to 70%. Welcome to the next level of tube bending! One of the main objectives on AMOB is to simplify the production process of our customers, and for this our full electric machines are the best solution!

The last tecnology of this machines guarantees a great performance, which means being faster, less mechanical adjustments, maximum precision and repeatability. This is the result of 60th years of research and experience.

eMOB's are easy to operate and allows to produce complex tube geometries in a single work cycle, multistack and multiradius bends.

AMOB products are designed in a technical department by a highly-skilled team. Over the years, AMOB has grown with it's customers' requirements and the market demand.

Where quality, reliability and production optimization are unquestionable requests, eMOB is the answer. Electric machines are the best technology solution.

They have incorporated the AMOB 3D software, fully conceived and designed "in-house" by the AMOB team, giving us the freedom to costumize, develop and tune it to fit your needs. There are countless sectors and possibilities for using bending in our daily lives. From the automotive, furniture, chemical, ship building or even in the aeronautical industry, all can be empowered by the eMOB range.

100% Electric

Fast and Optimized

High Precision

Intuitive Software

TUBE BENDING MACHINES

eMOB SERIES

A COMPLETE PRODUCTION PROCESS

AMOB Fully Electric CNC Tube Benders, the eMOB series feature state-of-the-art bending technology, processing tubes from **5mm up to 225mm** OD.

Our full electric CNC tube bending machines can bend fixed and variable radius, special sections within the same cycle, have multi-stack **up to 8 tools** at the same time and bend-on-bend parts.

High-quality appearance and minimum ovality even on small radius-to-diameter ratios.

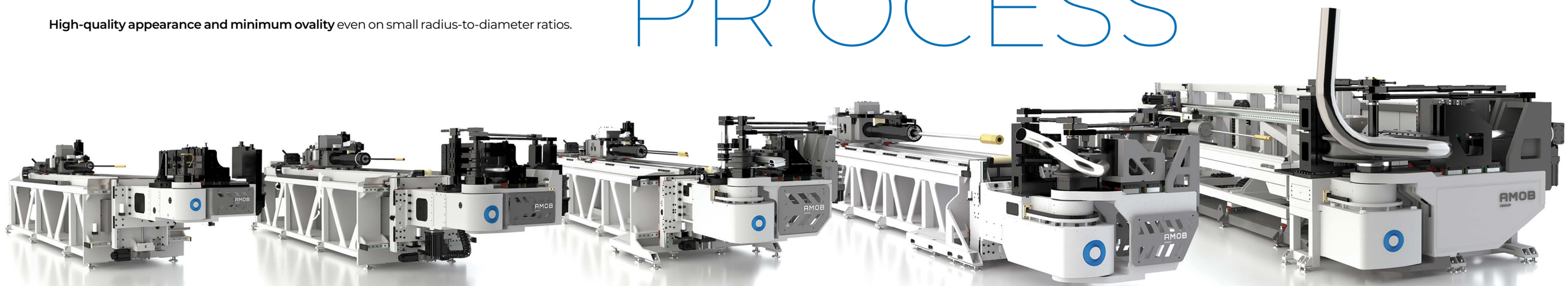

BENDING CAPACITY

- **eMOB 42** Up to 42mm
- **eMOB 52** Up to 52mm
- **eMOB 63** Up to 63mm
- **eMOB 80** Up to 80mm
- **eMOB 100** Up to 100mm
- **eMOB 130** Up to 130mm
- **eMOB 150** Up to 150mm
- **eMOB 180** Up to 180mm
- **eMOB 225** Up to 225mm

This series allows bending round or special section tube with multiple radii, and has a left or right bending direction. This is configurable by the customer, according to their bending requirements.

Amongst other features it incorporates automatic spring back compensation, as well as in-cycle correction, stores tooling configuration and positions, runs anti-collision, and interpolates all **axes**. Welding detection, punching/cutting mechanisms, and integrated loading/unloading systems are also available.

These machines are perfect If you are looking for large bending capacity. The carriage booster positioner and the high structural rigidity of the bending head allow to achieve a CLR (centerline radius) < 1xD (tube diameter) and helps to reduce the marks caused by the clamp.

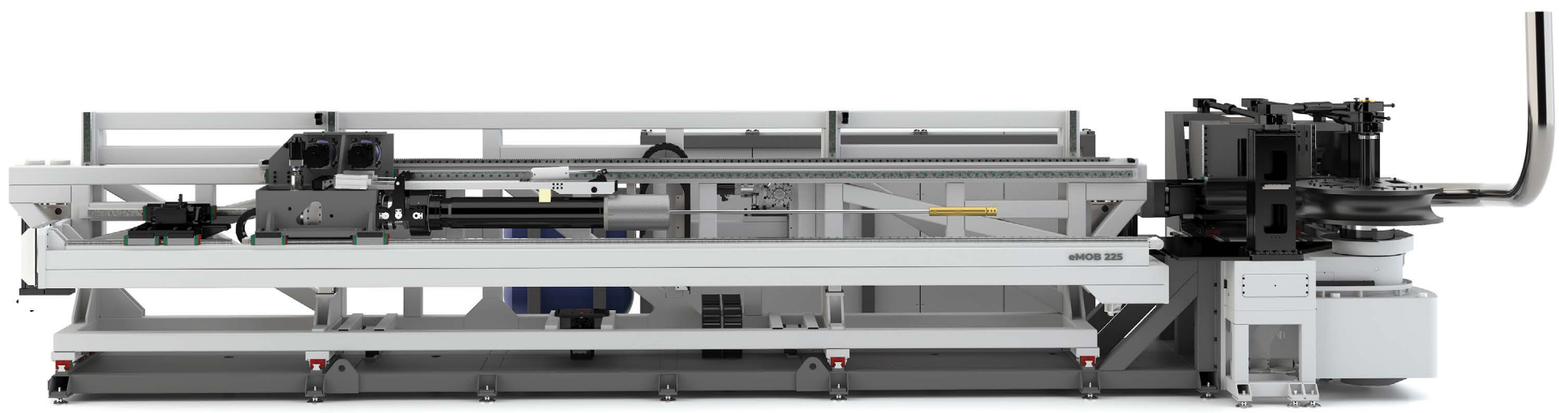

TUBE BENDING MACHINES

eMOB SERIES

Energy Consumption

Fully electric tube benders are the most energy efficient machines on the market. Their servo electric motors have the highest rate of energy efficiency and only use power when needed, with immediate response and torque.

Productivity

Productivity is boosted by shorter cycle times, low setup between projects, no adjustments during production, no wasted parts, energy cost reductions, and lastly low maintenance procedures.

> "Our fully electric bending machines are completely designed with the future in mind, optimising resources and time!"

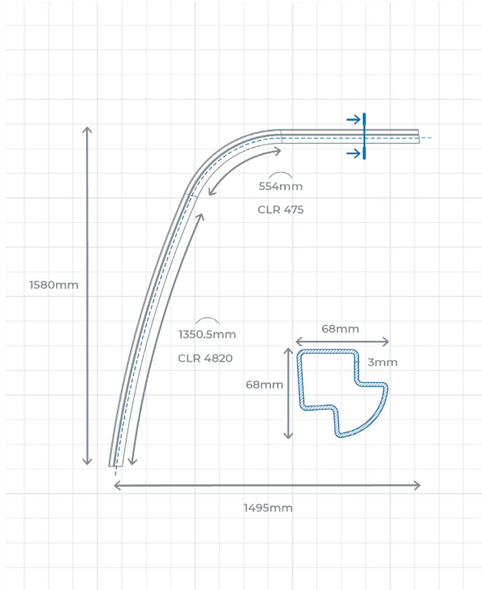

Safety

Safety is a prime concern with a machine that moves as quickly and quietly as a fully electric bender. Our fully electric CNC tube bender machines can integrate several emergency features such as area scanners and light barrier fences.

Service and Diagnostics

All machine activity is constantly monitored by an electronic motion control system, which provides information on the state of the machine, instructions, and warning messages. Our online technicians are always available for remote access to customer machines, and are able to diagnose and correct issues as soon as they arise.

EMOB SERIES

TECHNICAL CHARACTERISTICS

	eMOB 42	eMOB 52	eMOB 63	eMOB 80	eMOB 100	eMOB 130	eMOB 150	eMOB 180	eMOB 225
Max tube O.D. capacity mild steel (round tube) (mm) *	42,0 x 2,0	52,0 x 2,0	63,0 x 2,0	80,0 x 2,0	100,0 x 2,0	130,0 x 2,0	150,0 x 3,0	180,0 x 5,0	225,0 x 3,0
Servo controlled axes	9	9	9	9	10	10	10	11	11
X axis accuracy (mm)	+/- 0,05	+/- 0,05	+/- 0,05	+/- 0,05	+/- 0,05	+/- 0,05	+/- 0,05	+/- 0,05	+/- 0,05
Z axis accuracy (degrees)	+/- 0,05	+/- 0,05	+/- 0,05	+/- 0,05	+/- 0,05	+/- 0,05	+/- 0,05	+/- 0,05	+/- 0,05
Feeding X-axis maximum speed (mm/s)	1500	1500	1330	1330	833	694	498	250	250
Feeding X-axis push bending force (ton) - nominal speed	1,2	1,2	2,7	2,7	3,7	3,8	4,1	4,1	4,1
Feeding X-axis maximum speed (Booster option) (mm/s)	857	857	834	834	520	694	498	498	498
Feeding X-axis maximum strength (Booster option) (ton) - nominal speed	2,1	2,1	4,4	4,4	5,8	7,6	8,2	8,2	8,2
Max bending radius (mm) **	230	230	290	290	370	370	400	660	660
Min. bending radius (mm)	On request	On request	On request	On request	On request	On request	On request	On request	On request
Machine bed length from tool post to collet (mm) **	3000	3000	3000	3000	4000	4000	4000	6000	6000
Machine bed length from tool post to mandrel extractor (mm) **	4500	4500	4500	4500	6000	6000	6000	9000	9000
Max bore through carriage (mm)	45	55	65	82	102	135	152	160	160
Bending direction	Left or Right	Left or Right	Left or Right	Left or Right	Left or Right (on request)	Left or Right (on request)	Left or Right (on request)	Right	Right
Automatic mandrel lubrication	Yes	Yes	Yes	Yes	Yes	Yes	Yes	Yes	Yes
Mandrel rods	M10/M16/M24	M10/M16/M24	M12/M20/M27	M12/M20/M27	M16/M20/M30	M20/M42/M60	M16/M30/M60	M30/M60/M80	M30/M60/M80
Total installed power kVA (Pusher option)	22	22	33	33	46	56	66	105	105
Total installed power kVA (Booster option)	22	22	33	33	46	64	74	112	112
Average power consumption (%)	50%	50%	43%	43%	38%	38%	35%	35%	35%
Noise level / dBa	<65	<65	<65	<65	<65	<65	<65	<65	<65
Total weight (ton) ***	4,5	4,5	7,3	7,3	11,0	17,0	26,0	40,0	40,0
Machine dimensions (mm)	5900x1450x1600	5900x1450x1600	6850x1700x1800	6850x1700x1800	7200x1950x2200	8250x2650x2500	10000x2650x2150	12500x36350x2600	12500x3650x2600

* CLR=1,5D
** Increasable on demand
*** Details on request

TUBE BENDING MACHINES

eMOB 2 BEND SERIES

TE CHNOLOGY IN YOUR HANDS

This range has, as its main feature, the change of bending direction through a **rotative head**. It is capable of processing tubes from **5mm to 63mm** outside diameter (OD) and has multi-stack capability.

Our eMOB 2 Bend Series is defined as the **excellence of tube bending**, where quality control, versatility and production accuracy are carefully studied and improved by our team every day.

These machines, stand out for achieving a **left/right bend in-cycle**, with wiper die support, allowing to perform bends with quality and precision in tubes with tighter bending radii and bigger Diameter/Thickness ratios.

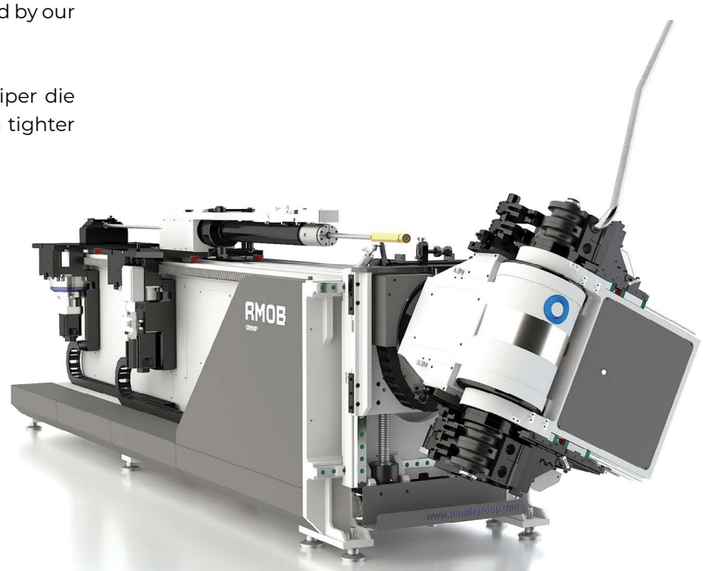

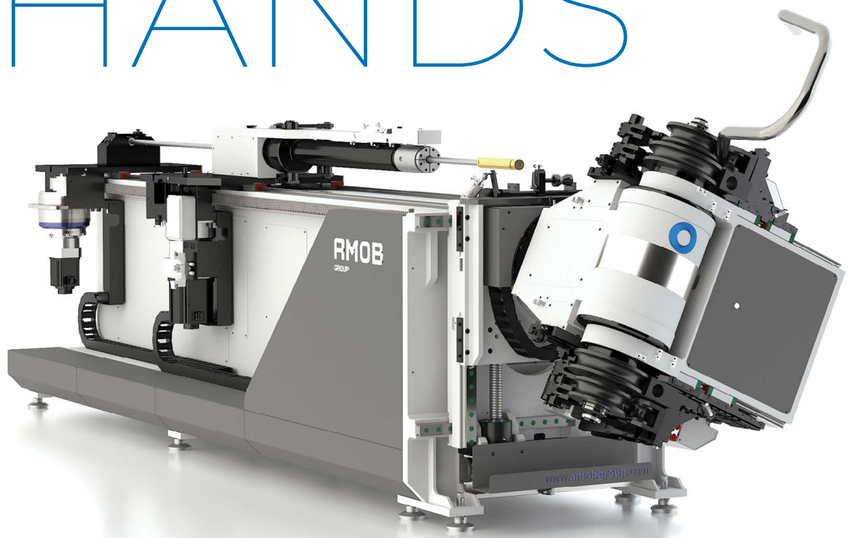

BENDING CAPACITY

eMOB 35 2 BEND
Up to 35mm

eMOB 52 2 BEND
Up to 52mm

eMOB 63 2 BEND
Up to 63mm

The eMOB 2 Bend is the ideal solution for bending the most complex forms when quality, reliability, and production optimisation are unnegotiable standards.

Our Right and Left in-cycle CNC tube bending machines can bend fixed and variable radii within the same cycle and allows bend-on-bend parts.

A carriage booster allows bends with radii as tight as 1D, and reduces clamping marks. Amongst other features it allows automatic spring back compensation, as well as “in-cycle” correction, stores tooling configuration and positions, runs anti-collision, and interpolates all **11 axes**.

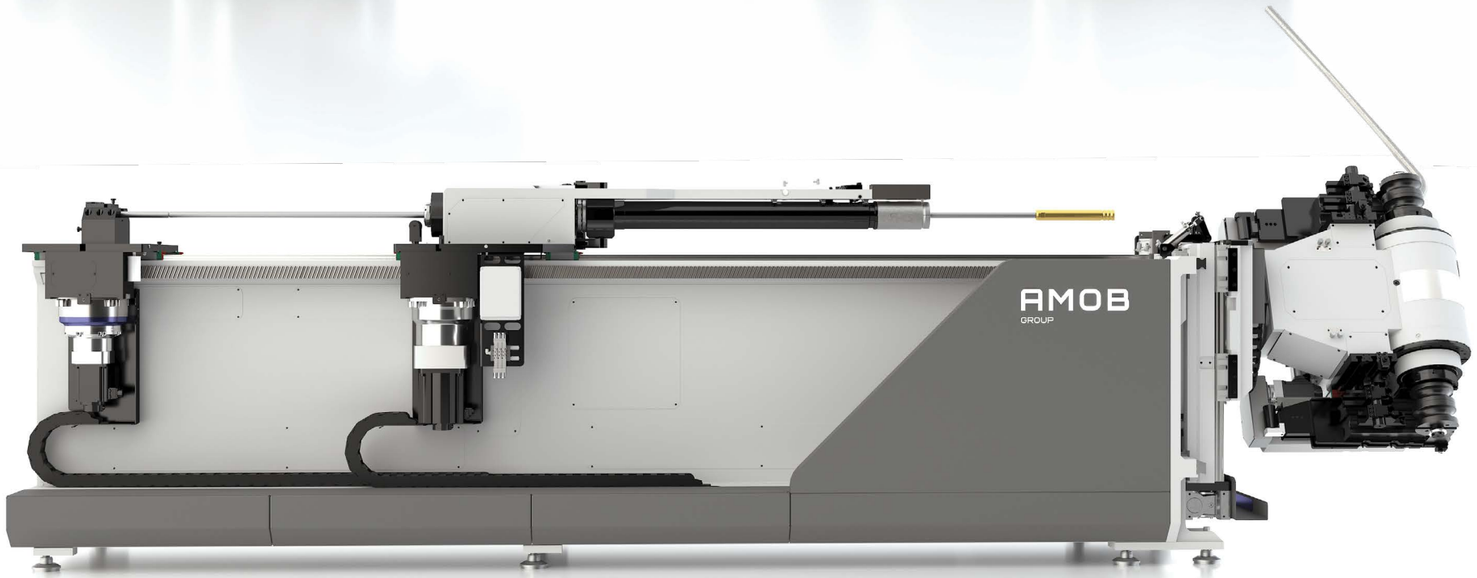

TUBE BENDING MACHINES

eMOB 2 BEND SERIES

Fully Electric

Environmentally friendly machine, you can reduce your consumption by up to 70% and optimize your production. Their servo motors have the highest rate of energy efficiency and only use power when needed, with immediate response and torque.

Speed

eMOB 2 Bend machines work at high speed with complete control. Each and every axes are independently controlled by absolute servo motors. These axes can be fully synchronized and optimized to perfection.

"No matter how difficult is the challenge we promise that we will bend it with eMOB 2 Bend Series!"

Waste Reduction

The in-cycle spring back compensation prevents trial and error operations, eliminating waste and testing periods during the tooling change over process. Ideal for high-accuracy sectors and small batch productions.

Service and Diagnostics

All machine activity is constantly monitored by an electronic motion control system, which provides information on the state of the machine, instructions, any warning messages. Our online technicians are always available for remote access to customer machines, and are able to diagnose and correct issues as soon as they arise.

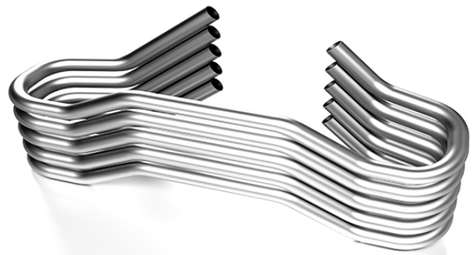

"The most technological, versatile and agile machines on the market."

EMOB 2 BEND SERIES

TECHNICAL CHARACTERISTICS

	eMOB 35 2 BEND	eMOB 52 2 BEND	eMOB 63 2 BEND
Max tube O.D. capacity mild steel (round tube) (mm) *	35,0 x 2,0	52,0 x 2,0	63,0 x 2,0
Servo controlled axes	11	11	11
X axis accuracy (mm)	+/- 0,05	+/- 0,05	+/- 0,05
Z axis accuracy (degrees)	+/- 0,05	+/- 0,05	+/- 0,05
Feeding X-axis maximum speed (mm/s)	2200	1500	1330
Feeding X-axis push bending force (ton) - nominal speed	0,5	1,0	2,0
Feeding X-axis maximum speed (Booster option) (mm/s)	700	700	834
Feeding X-axis maximum strength (Booster option) (ton) - nominal speed	1,5	2,5	4,0
Max bending radius (mm) **	150	155	190
Min. bending radius (mm)	On Request	On Request	On Request
Machine bed length from tool post to collet (mm) **	2000	2000	3000
Machine bed length from tool post to mandrel extrator (mm) **	3600	4000	4500
Max bore through carriage (mm)	38	52	63
Bending direction	Left & Right	Left & Right	Left & Right
Automatic mandrel lubrication	Yes	Yes	Yes
Mandrel rods	M6/M8/M16	M8/M16/M24	M12/M20/M27
Total installed power kVA	21	33	35
Average power consumption (%)	50%	50%	43%
Noise level / dBa	<65	<65	<65
Total weight (ton) ***	3,5	5,4	6,5
Machine dimensions (mm)	5900x1000x1500	5900x1200x1750	6900x1300x1800

* CLR=1,5D
** Increasable on demand
*** Details on request

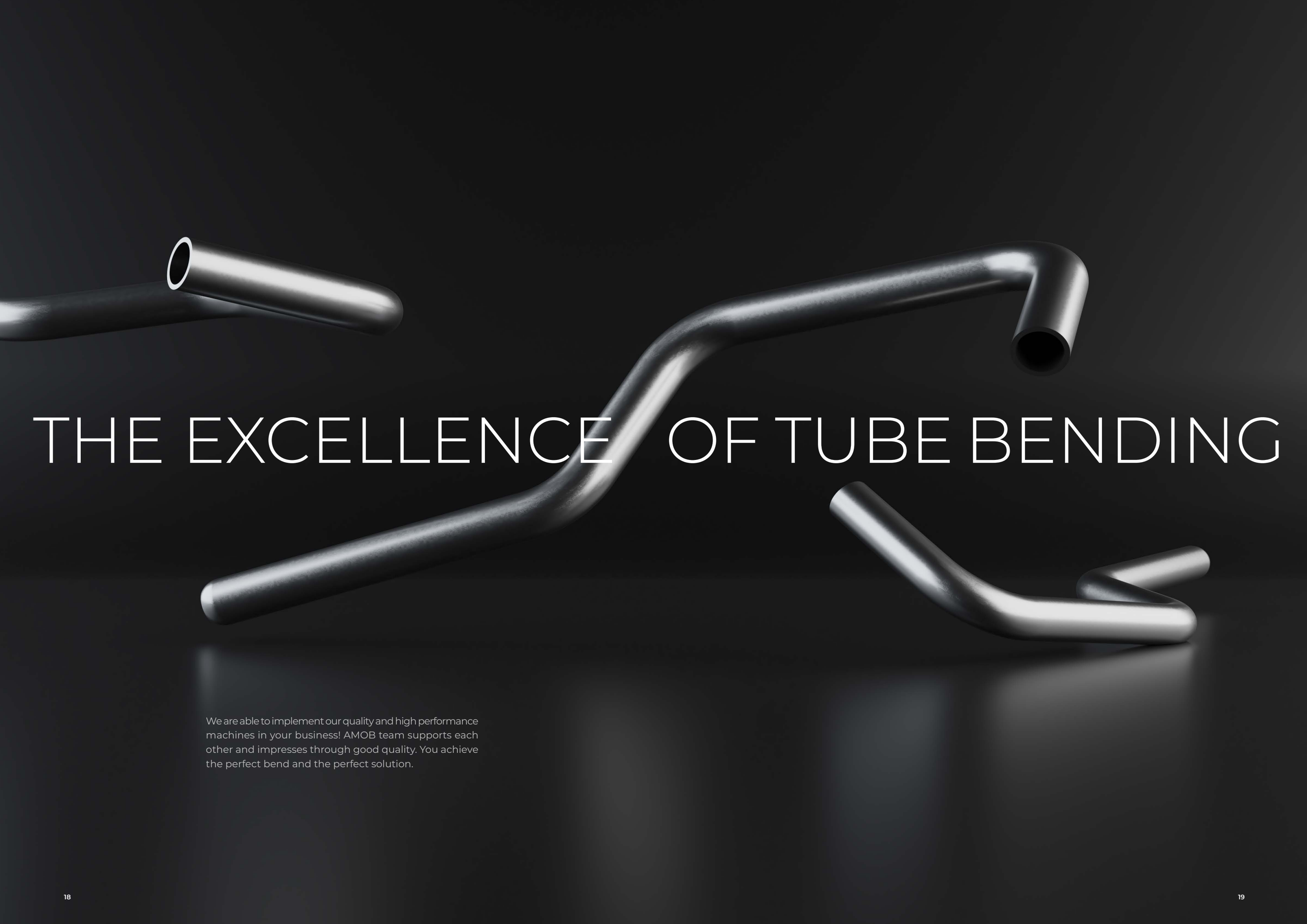

THE EXCELLENCE OF TUBE BENDING

We are able to implement our quality and high performance machines in your business! AMOB team supports each other and impresses through good quality. You achieve the perfect bend and the perfect solution.

TUBE BENDING MACHINES

eMOB LR SERIES

AMOB Left and Right Fully Electric CNC Tube Bender features state-of-the-art bending technology, processing tubes from **5mm up to 32mm** (OD) and have multi-stack capability.

Our eMOB LR Series machines automatically cycle into **right and left bend configuration** when not using wiper die, are ideal to bend tubes with smaller diameter/thickness ratios and bigger bending radii when compared with the eMOB 2 Bend Series.

BENDING CAPACITY

∅ **eMOB 16 LR**
Up to 16mm

∅ **eMOB 32 LR**
Up to 32mm

An excellent bender option if you are looking for a fast, simple machine with optimized cycles and an **excellent price/quality** ratio. Left and Right Fully Electric CNC tube bending machines can bend fixed and variable radii within the same cycle and allow bend-on-bend parts to be produced.

A carriage booster allows **bends with radii as tight as 1D** and consequently reduces clamping marks. eMOB LR Series allows automatic spring back compensation as well as “in-cycle” correction, stores tooling configuration and positions storage, runs anti-collision, 3D simulation and interpolates all the **axes**.

CUSTOMIZED SOLUTIONS AT FULL POWER

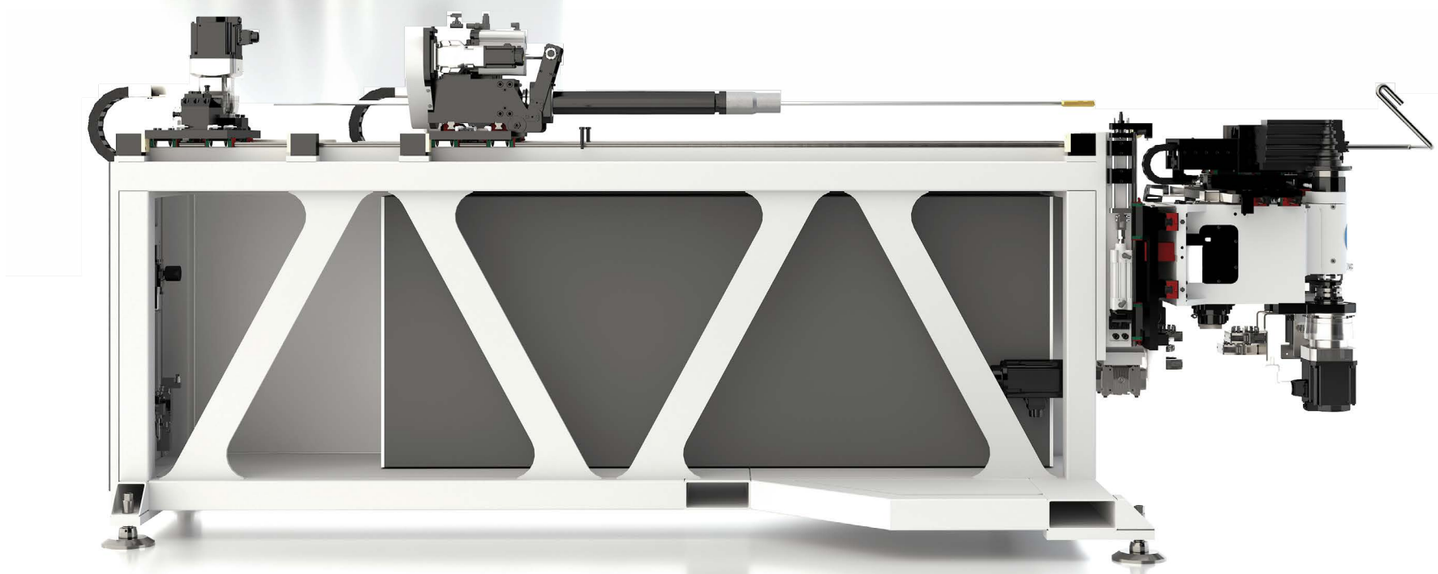

TUBE BENDING MACHINES

eMOB LR SERIES

Energy Consumption

Fully electric tube benders are the most energy efficient machines on the market. Their electric motors have the highest rate of energy efficiency and only use power when needed, with immediate response and torque.

Speed

eMOB LR machines work at high speed with complete control. Each and every axis is independently controlled by absolute servo motors, meaning the speed and movement of each can be synchronised and optimised to perfection.

> "Reliability, quality and low energy consumption!"

Compact

Small in size but a giant in technology! eMOB LR machines are the most compact machines on the market with extraordinary results when it comes to cycle times! Fast movements with a right and left bending process.

Service and Diagnostics

All machine activity is constantly monitored by an electronic motion control system, which provides information on the state of the machine, instructions, and warning messages. Our online technicians are always available for remote access to customer machines, and are able to diagnose and correct issues as soon as they arise.

> "This is pioneering innovation with our eMOB LR Series."

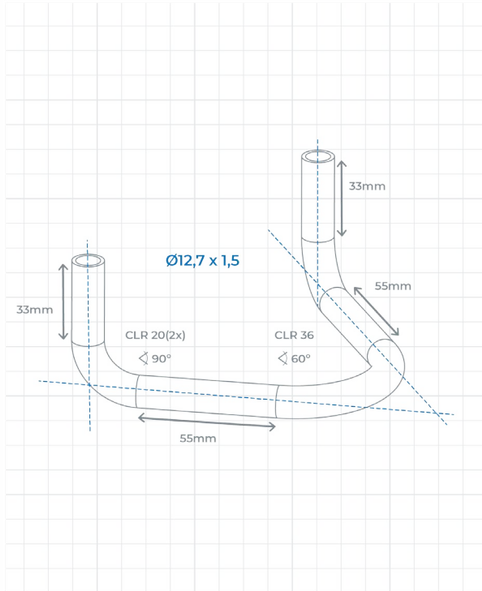

EMOB LR SERIES

TECHNICAL CHARACTERISTICS

	eMOB 16 LR	eMOB 32 LR
Max tube O.D. capacity mild steel (round tube) (mm) *	16,0 x 2,0	32,0 x 1,5
Servo controlled axes	7	7
X axis accuracy (mm)	+/- 0,05	+/- 0,05
Z axis accuracy (degrees)	+/- 0,05	+/- 0,05
Max. speed of the X axis (mm/s)	2400	1203
Bending direction	Left & Right	Left & Right
Max bending radius (mm) **	60	90
Min. bending radius (mm)	On Request	On Request
Machine bed length (mm) **	1400	1400
Max bore through carriage (mm)	18	25
Automatic mandrel lubrication	Yes	Yes
Mandrel rods	M5/M8/M10	M6/M8/M16
Total installed power kVA	10	14
Average power consumption (%)	60%	55%
Noise level / dBa	<65	<65
Total weight (ton) ***	1,2	2,0
Machine dimensions (mm)	3370x1300x1450	3600x1500x1400

* CLR=1,5D
** Increasable on demand
*** Details on request

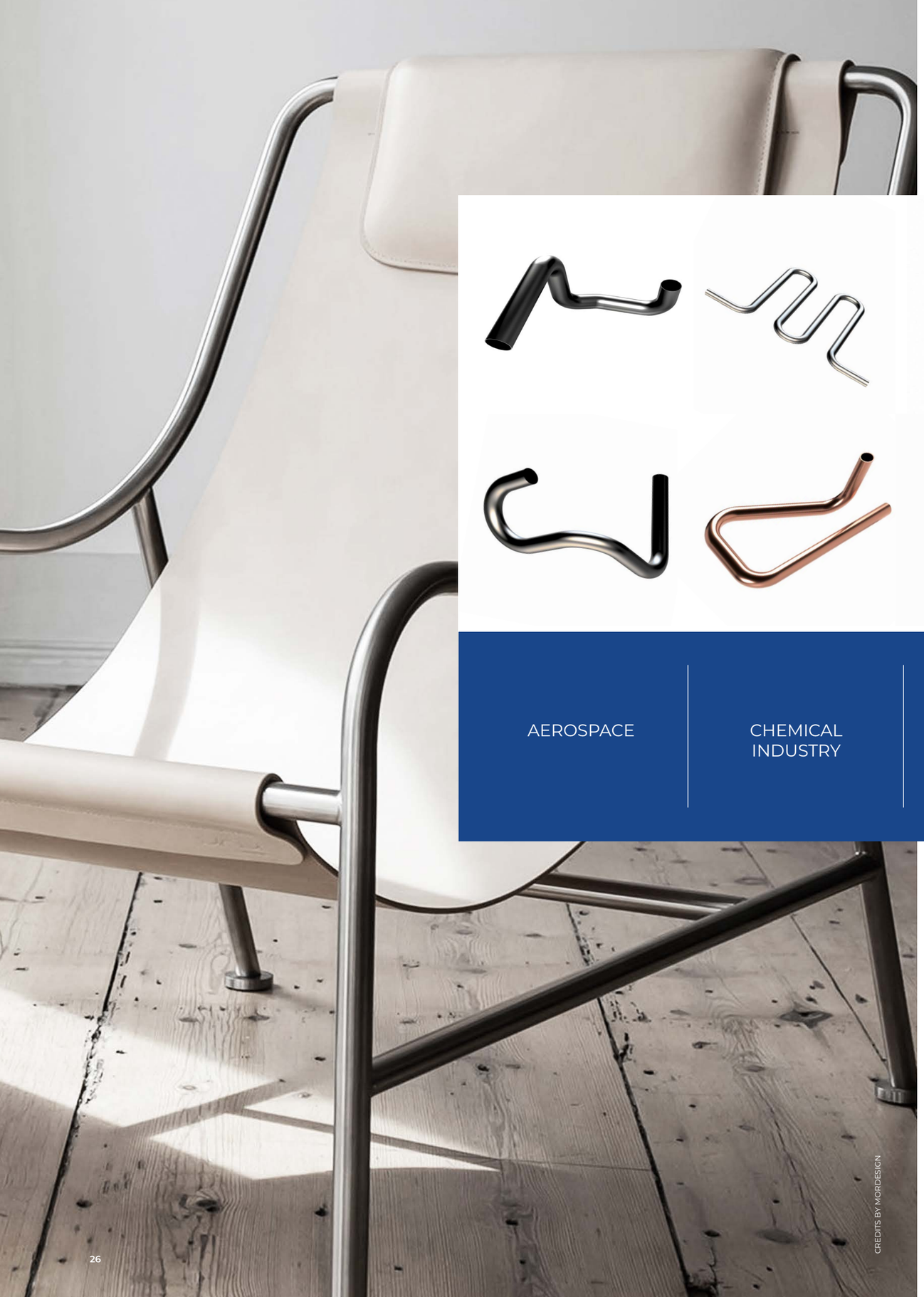

CREDITS BY MORDESIGN

AMOB SECTORS

TUBE APPLICATIONS

AEROSPACE	CHEMICAL INDUSTRY	FURNITURE	NAVAL AND OFFSHORE	AUTOMOTIVE	CONSTRUCTION

The highest quality results with minimum ovality!

There is an almost endless number of sectors that work with bend tube on a day-to-day basis! AMOB carefully studies each and every unique application, and presents the best solution for the individual customer and its sector.

Construction, Aerospace, Furniture, Automotive, Chemical Industry, Naval and Offshore are some sectors that take advantage of our tube bending machines, we guarantees results with the best technology and maximum accuracy.

Our range of mandrel benders are perfect for a variety of applications. With machinery that can bend thin wall stainless steel, titanium, 1D CLR, bend-on-bend parts our eMOB Series do it all. Making them perfectly suited to producing complex products with outstanding repeatability.

AMOB develops, designs, produces, markets and provides technical assistance. The perfect symbiosis when it comes to the world of tube bending. It is this internal capacity combined with the most advanced technical machines allows our company to serve its customers so effectively.

PROGRAMMING AND SIMULATION

AMOB 3D SOFTWARE

Multi-user, customisable permissions and access levels.

Designed to simplify and optimize the production process.

Configurable automatic backups.

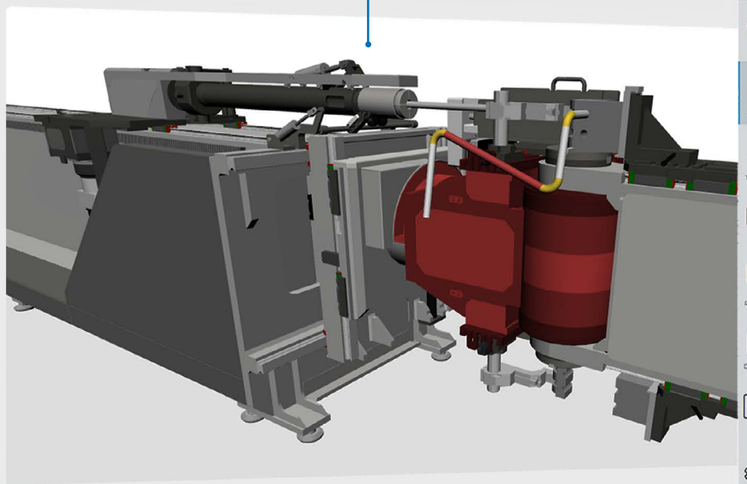

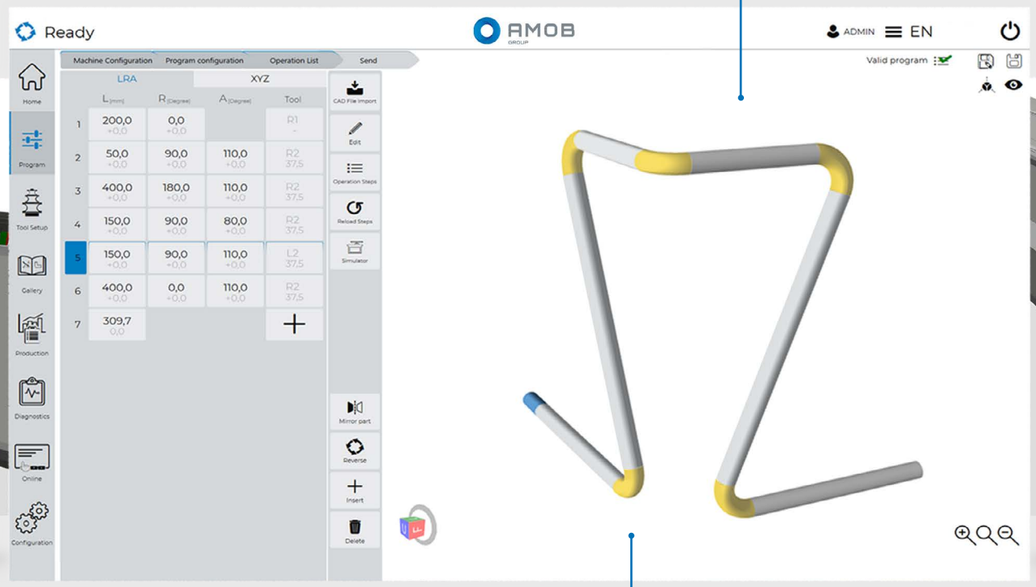

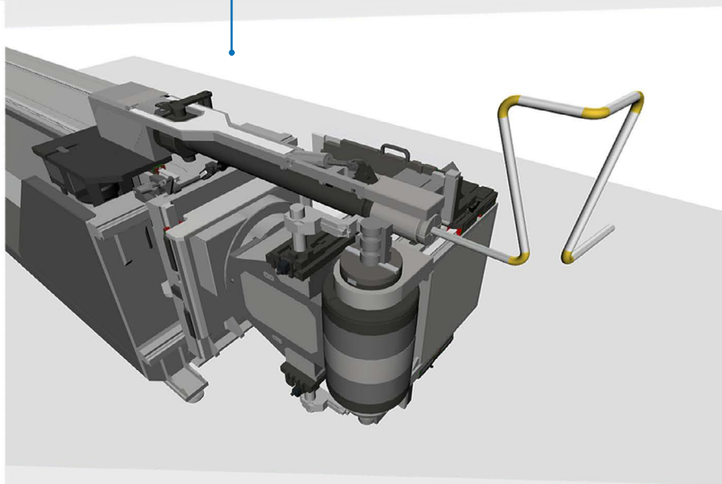

Possibility of integrating multiple solutions for spring back compensation, elasticity, mark/hole detection, etc.

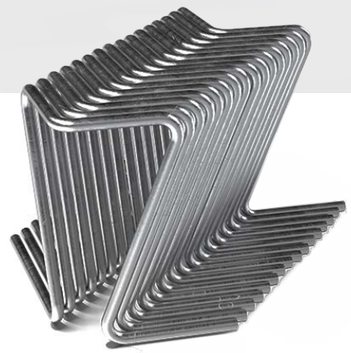

Optimise your production with AMOB 3D Software!

Our bending machines are designed to simplify and optimize the production process. To maximize the potential of the machines, AMOB's Software Development Team created the new AMOB 3D Software.

Not only capable of importing 3D files, it also boasts a lot of other features such as automatic spring back compensation, stores tooling configuration and geometry, and features anti-collision simulation for component feasibility without prototyping or wasting material.

Extremely easy to operate, it allows direct programming using coordinates (X, Y, Z radius) or LRA, as well as importing CAD files. Multi-user, customizable permissions and access levels, production traceability, errors, and machine events (with the possibility of exporting data in .CSV files, integration with a database or OPC server), compatibility and direct import of the main CAD formats (.STP, etc...), configurable automatic backups. It also has an "Open" cycle for more advanced users allowing you to give life to your ideas.

With AMOB 3D Software it's possible see every machine detail and each component with a true 3D representation, simulate the bending cycle, identify any collision and have full control of your bending machine.

The AMOB 3D software is the perfect symbiosis between the user and the hardware, maximizing the stream of information and control with a user friendly interface.

The most intuitive software

Real 3D graphics

Simple and intelligent

No manual adjustments

LET'S KEEP IN TOUCH

OUR SERVICES

TOOLING

Our in-house tooling design and manufacture team deals with any application that requires forming, bending or pressing! This allows us to achieve reduced delivery times and most importantly a turnkey service. We have full control over the process! 100% designed and produced by AMOB.

SPARE PARTS

Our parts for the whole world in a short period of time! AMOB has in stock more than 20 000 parts references for our customers' daily orders, from mechanical (bearings to gear boxes) through electronics or even pneumatics... All of this, ready to be shipped in 24 hours time-frame and maximizing your machines availability.

REMOTE SUPPORT

Get in Touch! We are in every corner of the world with AMOB Service Center. Our team not only understand your needs but they can also anticipate them. They are in close contact with factory support team, to quickly resolve any software issue and minimize your production downtime.

F.E.EN.10/22 AMOB Group®

AMOB GROUP

FORMING TECHNOLOGY SOLUTIONS

AMOB Group

+351 252 330 900 | info@amob.pt

Rua Padre Domingos Joaquim Pereira 1249
4760-563 Louro - V. N. de Famalicão
Portugal

amobgroup.com