AMOB GROUP

HYDRAULIC AND ELECTROMECHANICAL

TUBE BENDING MACHINES

amobgroup.com

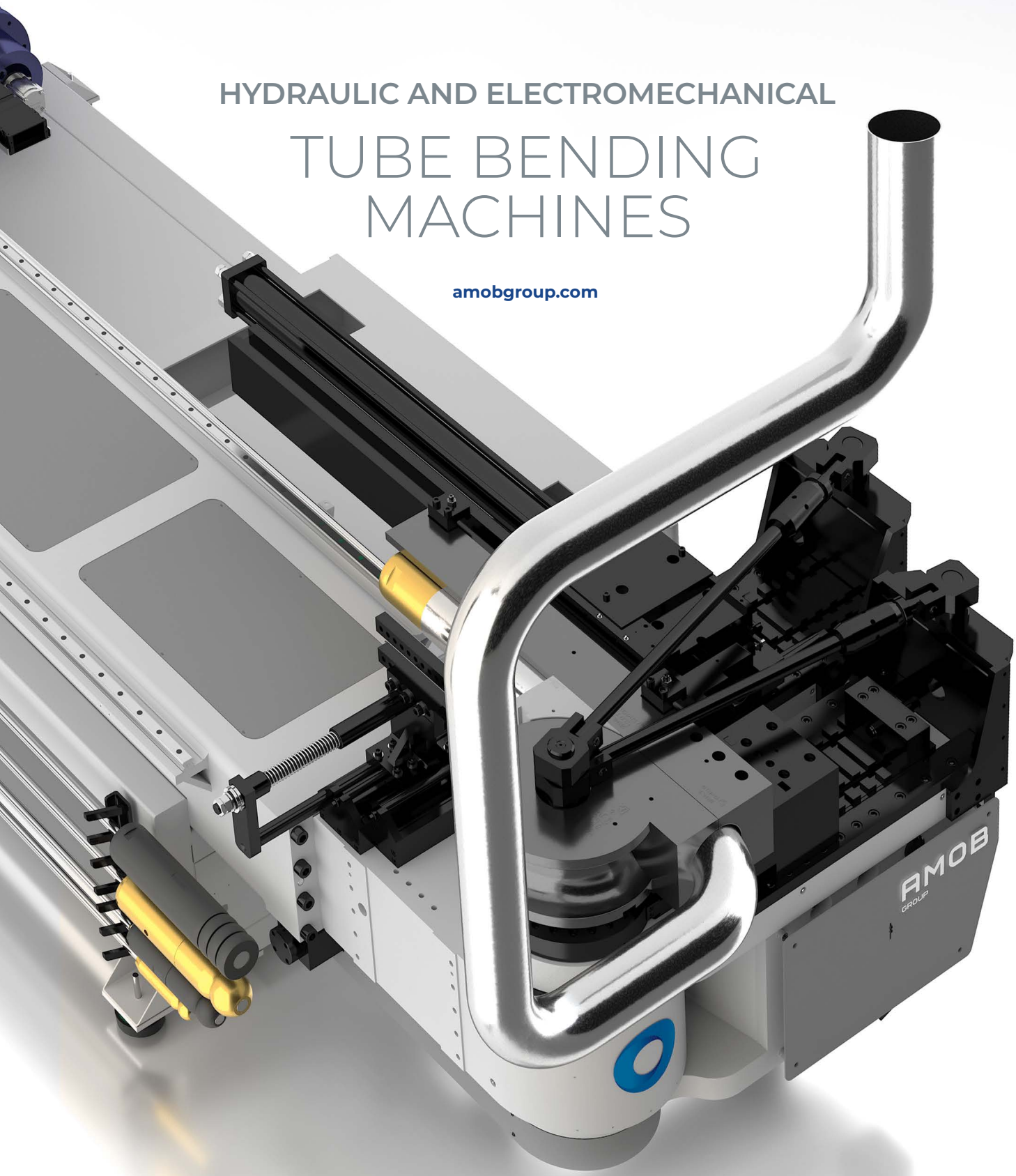

"One day I will have friends in the four corners of the world, friends that the others tend to call customers"

António Martins de Oliveira Barros

AMOB Founder
Since 1960

40 000 m² of **industrial areas**	More than **60 years of experience**	**100% made in Portugal**	Over **200 employees**

AMOB GROUP

OUR HISTORY SINCE 1960

In the 1950's, António Martins de Oliveira Barros began his career in a highly respected factory, surrounded by machines and tools. Soon, having worked in multiple departments of this factory, he rapidly developed skills that allowed him to assist owners of agricultural machinery within his community with technical expertise.

One such job required the use of a small, manual tube bender that was both impractical and difficult to use. This obstacle inspired Mr. Oliveira Barros to redesign the machine and manufacture a better one.

Once finished, he was so proud of the result that he promised to himself that he would do another 10 machines just like the one he finished so he could offer them to small local companies that had similar needs. Without noticing António Martins de Oliveira Barros was in that moment setting the ground work of what would become AMOB, that after 60 years and already in its third management generation, continues to develop products with the same ideals in its DNA – simple products that are easy to use and intuitive operation.

Over the years, the space dedicated to its activity has grown to its current facilities, with around 40 000 m² of covered area equipped with the most update production equipment.

AMOB has progressively become the world's leading manufacturer of metalworking technologies, providing one of the biggest ranges of specialized equipment for the tube and pipe bending industry worldwide.

AMOB GROUP

INCREASE YOUR PRODUCTIVITY WITH AMOB GROUP MACHINES!

Stable, flexible and economical, these are the key points for our CH / MDH / PT ranges!

As one of the world's leading manufacturers of tube bending machines, one of the main objectives in AMOB is to simplify the production process of our customers, and for this our machines are the best solution! The latest technology guarantees a great performance, which means being must faster, less mechanical adjustments, maximum precision and repeatability. This is the result of 60 years of research and experience. These cost-effective lines, are able to bend any type of requirement from our customers.

The CH Series, with its strength and accuracy, is extremely easy to operate and suitable for almost all types of applications and industries. If you are looking for simplicity, versatility and efficiently our entry level mandrel bender MDH is the perfect partner. For amazing results in a more compact footprint, the PT Series is an ideal choice!

AMOB products are entirely designed by our own highly-skilled technical department. Over the years, we have been growing with our partners' requirements and the overall market demand. Because of this, AMOB offers more than just stand alone machines, AMOB offers total bending solutions.

Our machines are developed to easily serve any new application or existing production lines. From furniture to heavy industry, from shipbuilding to aerospace, they all share a common need, bent tube!

There are countless sectors and possibilities for using tube bending machinery in our daily lives, and all can be inspired and enhanced by AMOB.

100% Customizable

Easy to Operate

High Precision

Intuitive Software

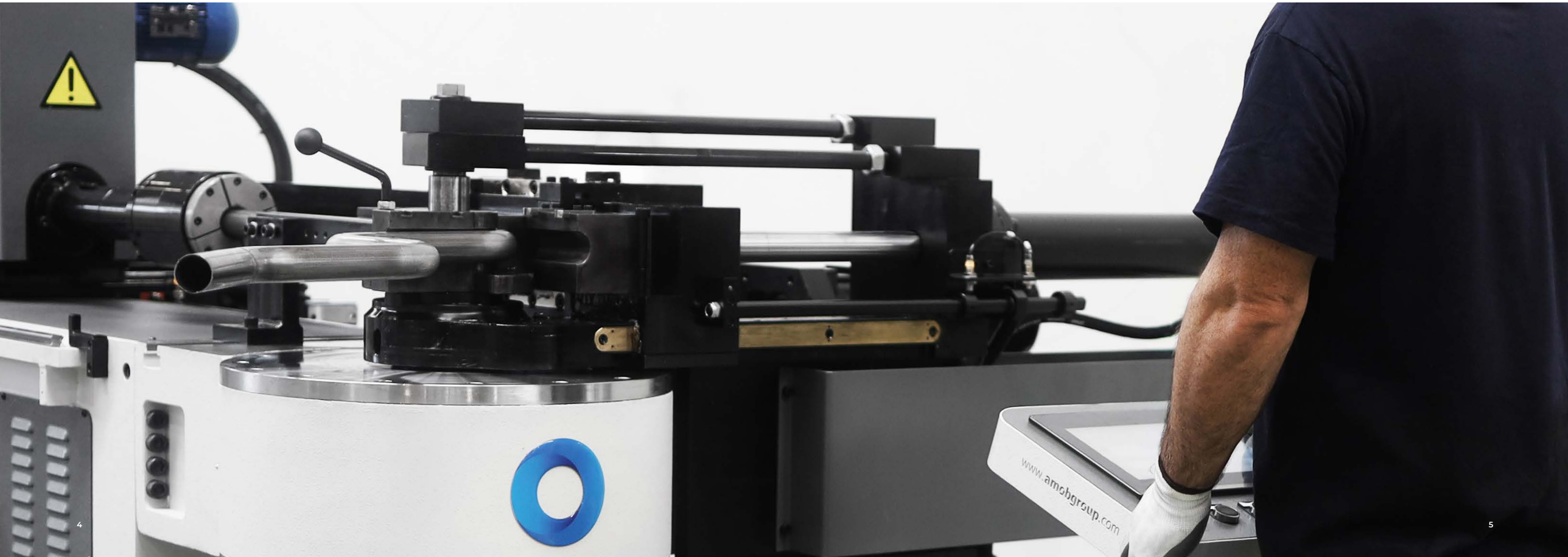

CH SERIES

PRECISION OF ALL MOVING PARTS

We are always reinventing ourselves and looking for the best solutions for our partners. Quality and excellence are two concepts that we can't do without for a second! Our production control means the precision that therefore result in long-lasting and efficient machines.

TUBE BENDING MACHINES

CH SERIES

DESIGNED TO OPTIMIZE

AMOB has developed its CH Series for the constantly increasing demands in the market. This range of tube bending machines is capable of processing tubes from **4mm up to 420mm** OD.

CH is a single stack machine, designed for a wide range of industries. It is also available in the full CNC version, for which **all three axis are automatic** and includes the spring back compensation and 3D simulation with anti-collision technology. CH machines can also be equipped with tube punching/cutting mechanisms.

These models are easy to operate, suitable and designed for the efficient and precise bending of high-strength materials, very large tubes as well as thick and thin-walled tubes.

CN1
1 Automatic Axis
Bending

CN2
2 Automatic Axis
Bending and Rotation

CNC
All Bending Axes

BENDING CAPACITY

- ∅ **CH 35** Up to 35mm
- ∅ **CH 42** Up to 42mm
- ∅ **CH 60** Up to 60mm
- ∅ **CH 80** Up to 80mm
- ∅ **CH 120** Up to 120mm
- ∅ **CH 170** Up to 170mm
- ∅ **CH 220** Up to 220mm
- ∅ **CH 270** Up to 270mm
- ∅ **CH 320** Up to 320mm
- ∅ **CH 350** Up to 350mm
- ∅ **CH 420** Up to 420mm

Their **rigidity, stability and impressive precision** in demanding conditions such as high humidity or harsh temperatures is what makes them great.

Available for almost all types of applications, the CH Series, can produce a wide range of bending radii (as low as 0,8 CLR/OD ratio) and can be equipped with rear and front tube loading system, motorized tool adjustment or automatic cutting systems just to name a few options.

Moreover, AMOB is capable of developing almost any **customized solution**, including bigger CLR's, smaller machine length, extra-axis among others.

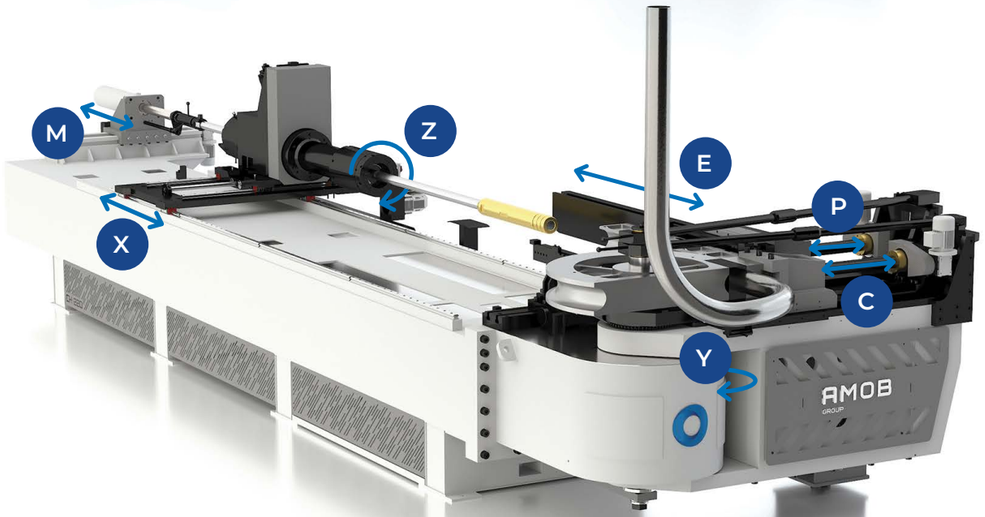

- **C** Clamp Die
- **E** Follower Pressure Die
- **M** Extractor
- **P** Pressure Die
- **X** Positioner
- **Y** Bending Axis
- **Z** Tube Rotation

OPTIONAL EQUIPMENT

01 Cutting

Integrated cutting systems, allowing the in-cycle separation of parts already bent.

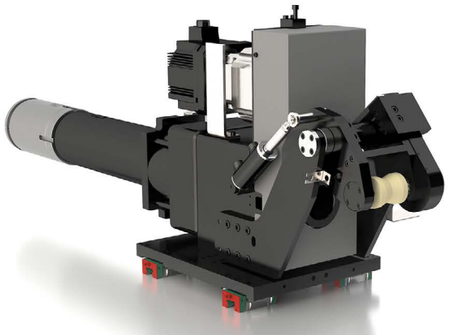

02 Semi Automatic Loading System

To increase the efficiency of the machine, a semi automatic loading system can be incorporated.

03 Automatic Centralised Lubrication

This lubrication system is able to reduce and facilitate the maintenance needs and tasks of the machine.

04 Split Die System

Vertically split former with hydraulic actuation to facilitate tube extraction.

AMOB 3D SOFTWARE

The most intuitive software on the market.
Simple and intelligent!

Our bending machines are designed to simplify and optimize the production process. To maximize the potential of the machines, AMOB's dedicated software development team created the new AMOB 3D software.

Not only capable of importing 3D files, it also includes functionalities such as automatic spring back compensation, tooling configuration and geometry storage, and features anti-collision simulation systems for component feasibility without the need for prototyping or wasting material.

Extremely easy to operate, it allows direct programming using coordinates (X, Y, Z radius) or LRA, as well as importing CAD files. It features multi-user, customizable permissions and access levels, production traceability, errors, and machine events (with the possibility of exporting data in .CSV files, integration with a database or OPC server), compatibility and direct import of the main CAD formats (.STP, etc...), configurable automatic backups. This new software is the state of the art regarding control, integration and simplicity!

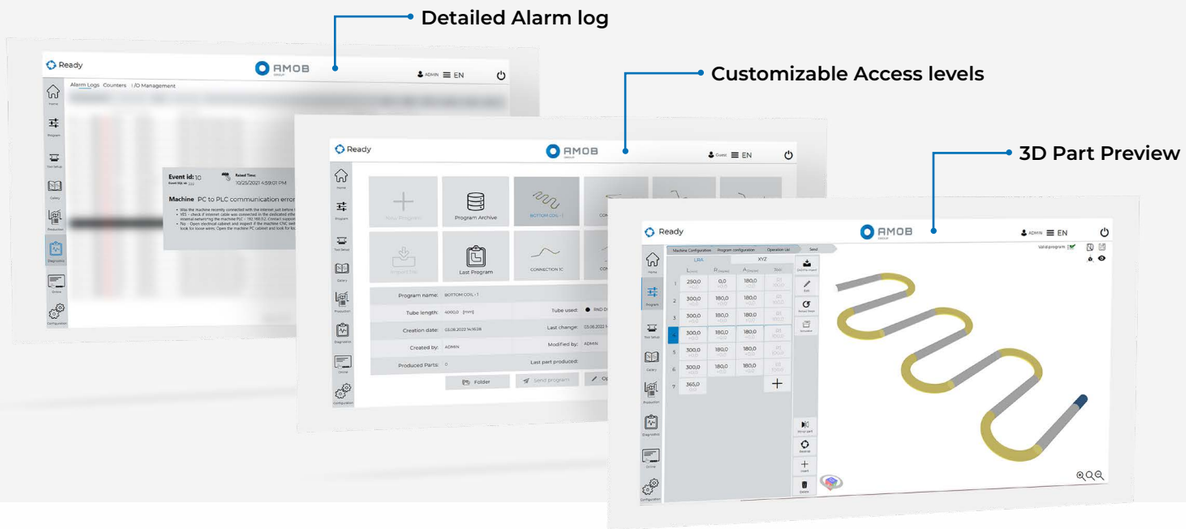

TUBE BENDING MACHINES

CH BOOSTER OPTIONAL EQUIPMENT

BOOST YOUR BUSINESS

We have the solution for the most demanding of requirements!
High levels of precision, low ovality, and low wall thinning.

The CH booster is AMOB's answer to the specific needs of the boiler, heat-exchanger, waste burner, and steam sectors - giving your business the boost it needs!

The booster mechanism is integrated into the pressure die carrier head - parallel to the centerline of the workpiece. To ensure proper grip of the tube, a secondary clamp is used behind the pressure die assist. To control the booster effect on the bend, the user can dynamically manage its behavior throughout the bending process - from 0° to 192° - using the machine software interface.

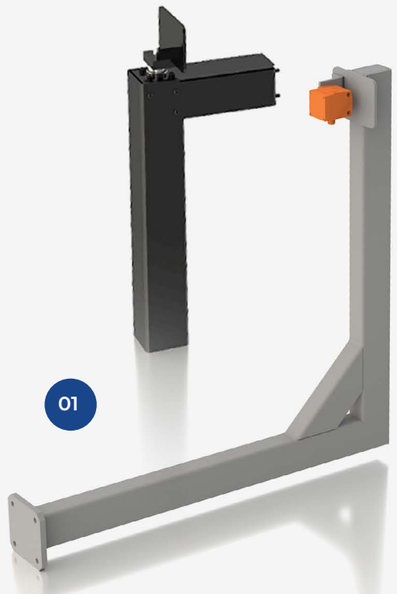

Laser Reference System

Laser sensor used to reference the tip of the tube.

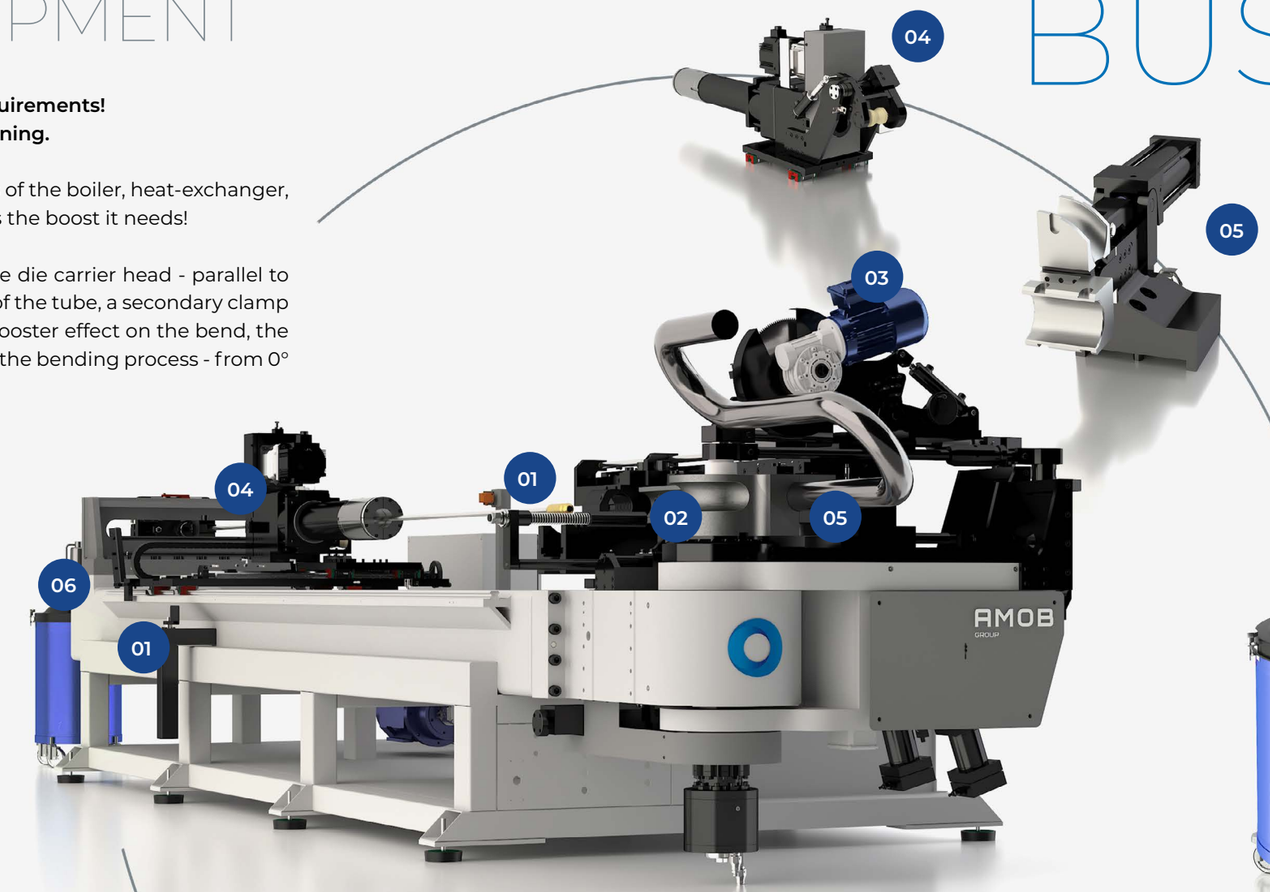

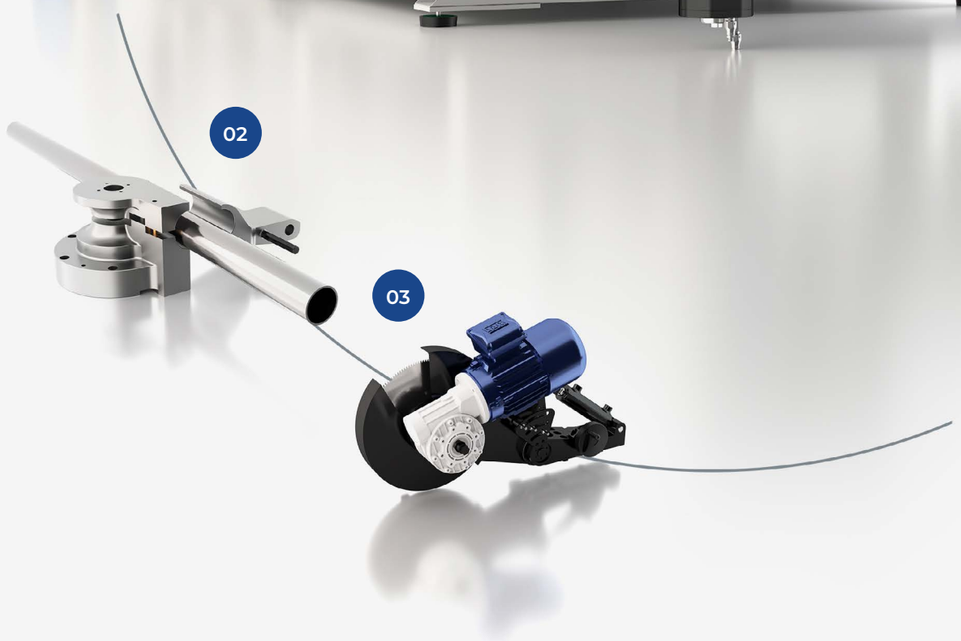

Rotary Clamp Die System

Allows single stack CH Series machines to produce bend-on-bend parts.

Mandrel Lubrication System

Programmable pump to keep mandrel lubricated during the entire bending process.

Combining the booster system with specifically designed tools, we manage to achieve **low ovality and low wall thinning results** even when bending mandrelless on <0,8D CLR/OD ratios.

By adding a split die system, a cutting system, and laser reference system to a CH Booster, our customer can **maximize the machine's full potential**, minimising auxiliary production processes like welding, cutting, inspection and more.

When the booster device is combined with a fully hydraulic CNC bending machine, we can maximize precision part replication with the shortest possible process times, while also minimising the possibility of human error.

TUBE BENDING MACHINES

CH SERIES

Miozzo S.R.L reinforces its position in the agri-food market with CH 220!

A company within the agri-food sector with modernized services and equipment has been able to respond to the constant requirements of the Italian industry!

Innovations in the sector have lead to ever increasing demands from the market. This included larger diameter tubes up to Ø254mm, and radii greater than 1000mm (CLR). AMOB was the perfect partner for the development of a machine entierly customized according to the needs of this project, where the main feature is the fixed radius bending technology, with the mandrel supporting the tube, reducing the ovality.

The CH 220 features quick tool changes, a front and rear tube loading system, monitored tool adjustment, and comes equipped with the latest user-friendly AMOB 3D bending software.

AMOB is a world leader in bending solutions with a portfolio of customers spread across the four corners of the world. The commitment to quality technical services, state-of-the-art technology, and total control of the manufacturing process are key factors as to why the company has been a dominant force in the market for more than 60 years.

"I had no doubts in the choice because from day one Mr. Manuel Barros gave me confidence, and made himself 100% available to listen to the challenges of my business. Together we built the best solution for me."

Luca Miozzo, CEO

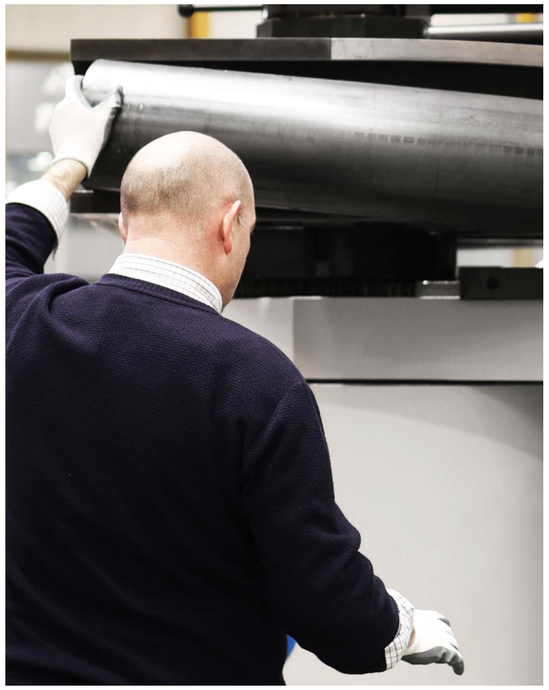

CH SERIES

TECHNICAL CHARACTERISTICS

	CH 35	CH 42	CH 60	CH 80	CH 120	CH 170	CH 220	CH 270
Maximum bending OD x Thickness **(steel - 450 N/mm²)** (mm)	35,0 x 2,0	42,0 x 2,0	60,0 x 3,0	80,0 x 3,5	114,3 x 8,6	168,3 x 11,0	219,1 x 12,7	273,0 x 15,1
Maximum bending OD x Thickness **(stainless steel - 700 N/mm²)** (mm)	28,0 x 2,0	38,0 x 1,5	50,8 x 2,0	76,0 x 1,5	118 x 4,0	168,3 x 5,0	219,1 x 6,3	273,0 x 8,8
Maximum centre line radius / outside bending radius – CLR (mm) *	125	125	220	260	340	600	1000	1000
Maximum useful length (mm) **CN1** *	2000	2000	2000	2000	2000	6000	6000	6000
Maximum useful length (mm) **CN2** *	3000	3000	4000	4000	4000	-	-	-
Maximum useful length (mm) **CNC** *	3000	3000	4000	4000	4000	6000	6000	6000
Maximum bending angle (°)	190	190	190	190	190	190	190	190
Standard bending direction	Clockwise**	Clockwise**	Clockwise**	Clockwise**	Clockwise**	Clockwise**	Clockwise**	Clockwise**
Feeding X-axis speed (mm/s) **CNC**	1660	1660	1600	1330	1330	720	333	333
Working pressure (bar)	180	180	180	180	180	180	180	180
Pneumatic system requirements (bar)	6	6	6	6	6	6	6	6
Power voltage (V)	400 ±10%	400 ±10%	400 ±10%	400 ±10%	400 ±10%	400 ±10%	400 ±10%	400 ±10%
Installed power (kW) **CN1**	4	4	8	15	30	33	38	38
Installed power (kW) **CN2**	4	4	8	15	30	-	-	-
Installed power (kW) **CNC**	18	18	35	39	47	48	77	86
Setting dimensions (standard) (LxWxH - mm) **CN1**	2900x830x1130	2900x830x1130	3100x1200x1100	3300x1400x1300	3500x2055x1600	7000x2900x2100	9000x3400x2170	9500x4060x2175
Machine approximate weight (standard) (kg) **CN1**	1200	1200	1500	2500	5000	12000	14000	24000
Setting dimensions (standard) (LxWxH - mm) **CN2**	4700x990x1330	4700x990x1340	6700x1900x1450	7000x1900x1615	7250x2055x1620	-	-	-
Machine approximate weight (standard) (kg) **CN2**	1400	1400	3500	5500	8000	-	-	-
Setting dimensions (standard) (LxWxH - mm) **CNC**	4694x990x1328	4694x990x1328	6700x1900x1450	7000x1900x1615	7250x2055x1620	11300x2750x2030	12350x3555x2600	14100x4060x2800
Machine approximate weight (standard) (kg) **CNC**	1400	1400	3500	5500	8000	25000	42000	53000

* Customizable on request
** Counter clockwise on request

Subject to technical modifications

CH SERIES

TECHNICAL CHARACTERISTICS

	CH 320	CH 350	CH 420
Maximum bending OD x Thickness **(steel - 450 N/mm²)** (mm)	323,9 x 17,5	355,0 x 19,1	419,0 x 21,4
Maximum bending OD x Thickness **(stainless steel - 700 N/mm²)** (mm)	323,9 x 8,8	355,0 x 8,8	419,0 x 8,8
Maximum centre line radius / outside bending radius – CLR (mm) *	1050	1050	1200
Maximum useful length (mm) **CN1** *	6000	6000	6000
Maximum useful length (mm) **CN2** *	-	-	-
Maximum useful length (mm) **CNC** *	6000	6000	6000
Maximum bending angle (°)	190	190	190
Standard bending direction	Clockwise**	Clockwise**	Clockwise**
Feeding X-axis speed (mm/s) **CNC**	250	250	200
Working pressure (bar)	180	180	180
Pneumatic system requirements (bar)	6	6	6
Power voltage (V)	400 ±10%	400 ±10%	400 ±10%
Installed power (kW) **CN1**	121	129	139
Installed power (kW) **CN2**	-	-	-
Installed power (kW) **CNC**	132	140	150
Setting dimensions (standard) (LxWxH - mm) **CN1**	12000x4100x2900	12000x4100x2900	12000x4100x2900
Machine approximate weight (standard) (kg) **CN1**	60000	60000	60000
Setting dimensions (standard) (LxWxH - mm) **CN2**	-	-	-
Machine approximate weight (standard) (kg) **CN2**	-	-	-
Setting dimensions (standard) (LxWxH - mm) **CNC**	13800x4100x2900	13800x4100x2900	14500x4100x2900
Machine approximate weight (standard) (kg) **CNC**	75000	75000	95000

* Customizable on request
** Counter clockwise on request

Subject to technical modifications

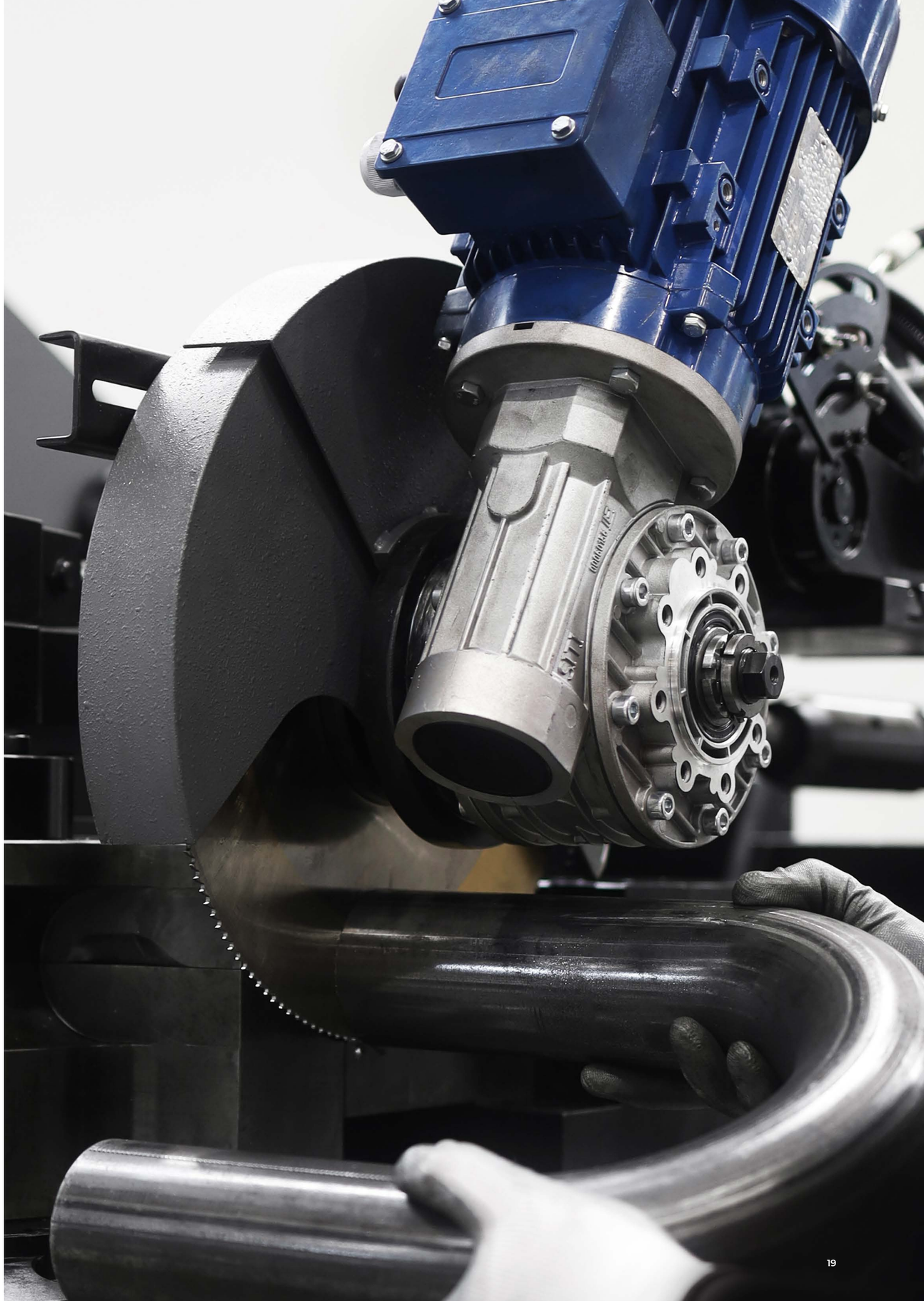

MDH SERIES

RIGIDITY, STABILITY AND ABSOLUTE PRECISION

Power and innovation. This has been our mission since 1960. AMOB working together with each and every customer to achieve the right solution for every business. This is possible because we have full control over the process!

TUBE BENDING MACHINES

MDH SERIES

A COMBINATION OF STRENGTH AND ACCURACY

The MDH Series is perfect entry into the mandrel bending world as one of our most **versatile, simple and efficient** machines.

Covering a capacity range from **6mm up to 90mm** (OD), these versatile bending machines are an easy and obvious choice for those starting up a new tube bending operation. MDH tube benders **complement production or prototyping divisions**. These electromechanical tube bending machines come with a modern industrial design, ergonomically optimized control panel, hydraulic mandrel extractor, clamp die, and pressure die. As a result it guarantees **great quality** bend finishes.

CN1
1 Automatic Axis
Bending

CN2
2 Automatic Axis
Bending and Rotation

CN3
Bending, Rotation and Feeding

BENDING CAPACITY

MDH 60
Up to 60mm

MDH 90
Up to 90mm

Our MDH series, with NC carriage displacement axis on the CN3 versions, have a **user-friendly interface** and allows bending complex tube geometries within seconds of programming!

An affordable and compact package that only requires electrical power to get to work and provides features such as easy setups, **high performance and low maintenance**. These semi-automatic machines with simple regulation are capable of producing precision bends! AMOB has the best solution for the various levels of application.

We build all of ranges with the possibility to customize multiple aspects and to be able to adapt the bending machines to any requirement.

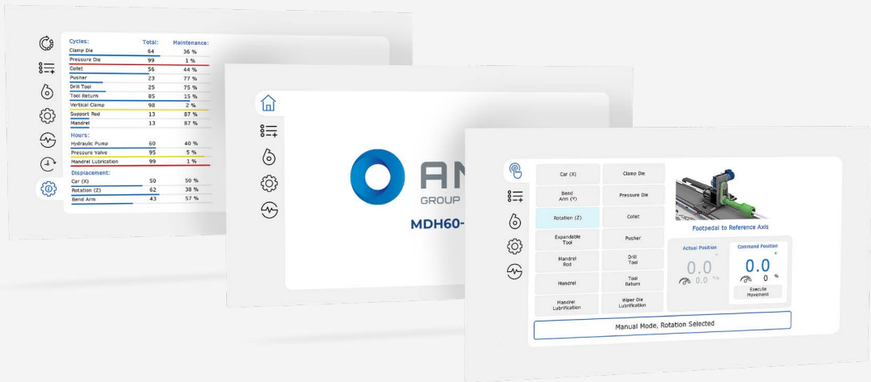

MDH SERIES SOFTWARE

The future has never been so close!

Interactive, visual and user friendly - this is the new software developed by AMOB. Welcome to the next level of tube bending machines! This new software has the ability to record up to 3 000 unique programs, each with 12 operational steps, plus the possibility to customise the initial settings of the program when it is created.

With the easy to interpret automatic mode, with step by step or fully sequential execution, the user also has the possibility of integration with a security scanner. MDH Series software has a detailed array of technical alarms and warnings for everything from imminent danger to upcoming maintenance scheduling. This allows for quick diagnosis so that the operator can rapidly resolve possible errors.

TUBE BENDING MACHINES

MDH SERIES

Adler brothers lead the german market with their exhaust systems for motorcycles!

AdlerTech, a company based near Dresden, Germany, is now a world reference! It develops, designs and manufactures exhaust systems for all types of combustion engines “Made in Germany”.

Over time the Adler brothers faced the challenge of producing 100% effective bends with excellent results, for this they stopped welding because it’s a very time consuming and expensive process and they decided to look for a tube bending machine, here came the first contact with the AMOB Group.

Since the beginning, Frederic and Enrico identified with the AMOB team and a proposal was quickly presented based on AdlerTech needs, the main objective would be to bend pipes for motorcycle exhausts in thin-walled titanium in the range of OD35 to 60 mm.

The perfect solution for AdlerTech was an MDH90 CN1 bending machine, this range comes with hydraulic mandrel extractor, clamp and pressure die, and it guarantees a good-quality bending result, MDH Series allows bending complex tube geometries within seconds of programming!

“We found the contact with the german sales team very serious and this has then encouraged us together with the technical aspects to buy the machine. Now it is here and we are very happy!”

Frederic Adler, Founder

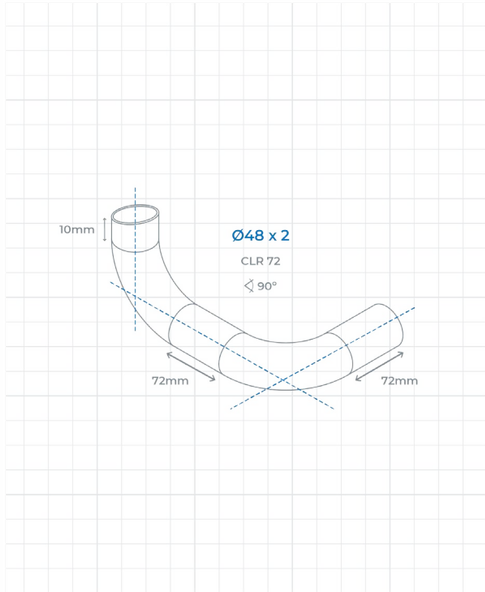

MDH SERIES

TECHNICAL CHARACTERISTICS

	MDH 60	MDH 90
Maximum bending OD x Thickness **(steel - 450 N/mm²)** (mm)	60,0 x 3,0	90,0 x 3,0
Maximum bending OD x Thickness **(stainless steel - 700 N/mm²)** (mm)	50,8 x 2,0	76,2 x 2,0
Maximum centre line radius - CLR (mm)	195	305
Maximum useful length (increasable on demand) **CN1** (mm)	2000	2000
Maximum useful length (increasable on demand) **CN2 / 3** (mm)	3000	3000
Maximum bending angle (°)	190°	190°
Standard bending direction	Clockwise	Clockwise
Bending Y-axis maximum speed (°/s)	11	10
Feeding X-axis maximum speed (mm/s) **CN3**	334	334
Rotation Z-axis maximum speed (°/s)	37	14
Working pressure (bar)	180	180
Frequency (Hz)	50	50
Power voltage (V)	400 ±10%	400 ±10%
Installed power (kW) **CN1 / 2 / 3**	10,2 / 10,5 / 12	12 / 12,3 / 14
Setting dimensions (standard) (LxWxH - mm) **CN1**	3000x1200x1400	3600x2300x1500
Setting dimensions (standard) (LxWxH - mm) **CN2 / 3**	5000x1200x1400	5600x2300x1500
Machine approximate weight (standard) (kg) **CN2 / 3**	2000	3000

PT SERIES

YOUR CREATIVITY CAN BECOME REALITY

Compact layout for precision bending parts! Over the years AMOB reinforces its position on the market and features such as usability, performance, reliability, flexibility and simple programming are present in all machines.

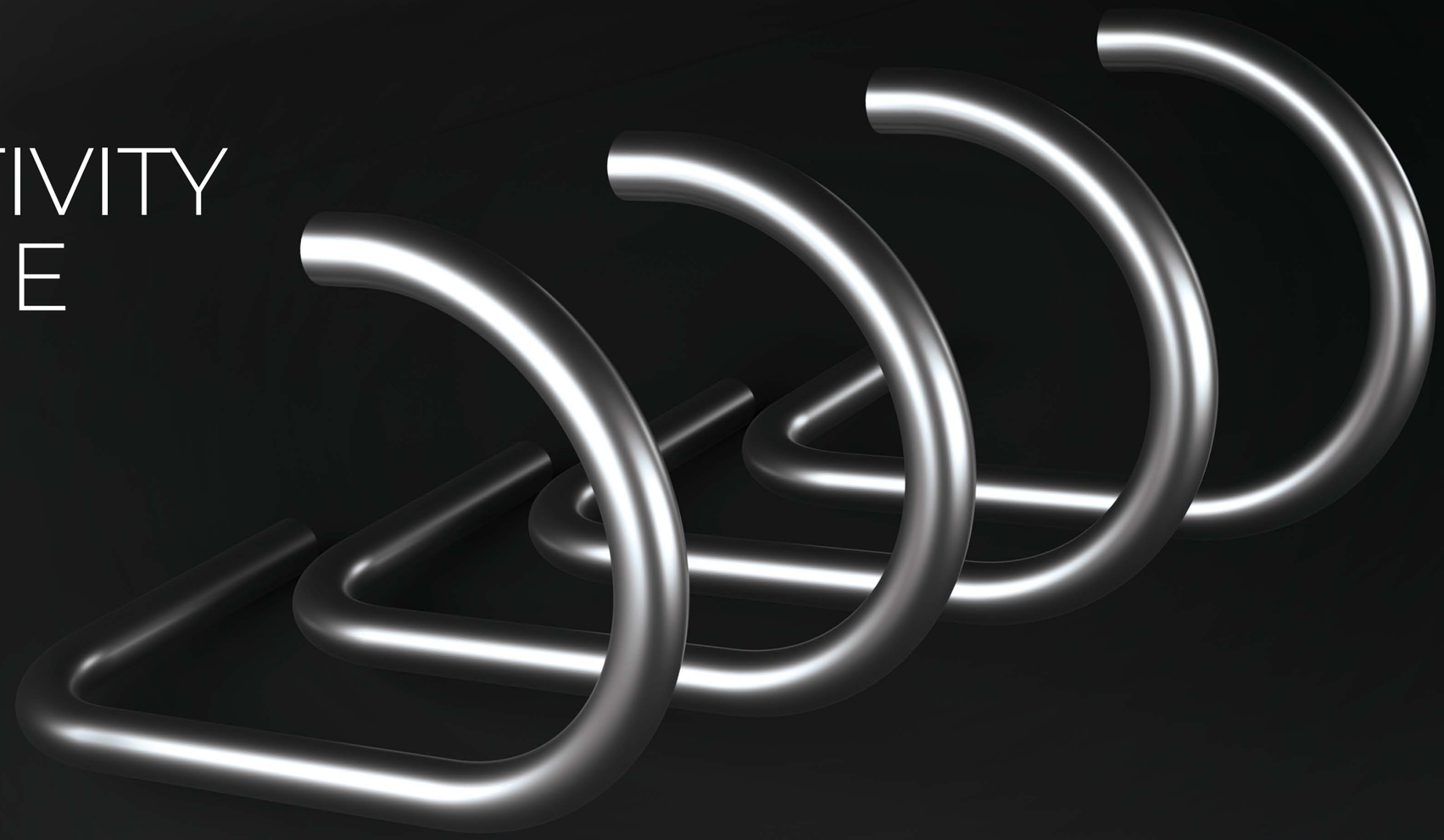

TUBE BENDING MACHINES

PT SERIES

REIN FORCE YOUR PRODUCTION

The AMOB rotary draw bender range can process tubes **up to 127mm OD** covering the needs of those bending large center line radii. Usually, these tubes do not require a mandrel which enables extremely quick tooling changeover and reduced setup time.

Our compact PT's range is capable of bending tubes with different shapes and materials, always guaranteeing a **good finish and maximum speed**! Compact machines, with the **best technology** and a powerful motor capable of working throughout the day. For AMOB, the safety of all equipment produced is a priority, for this, all machines have a safety pedal that allows total stop at any time.

With great portability and a small footprint our mandrelless tube benders can be moved and stored away when required. With a numerically controlled stop system they also promote both reliability and repeatability.

Due to the **intuitive and easy to use panel**, this rotary draw tube bending machine can be used by both the most experienced operator and a newly appointed apprentice. If large radius and thick-walled tube bending is your business then AMOB PT Series is your solution.

BENDING CAPACITY

- ∅ **PT 42** Up to 42mm
- ∅ **PT 76** Up to 76mm
- ∅ **PT 127** Up to 127mm

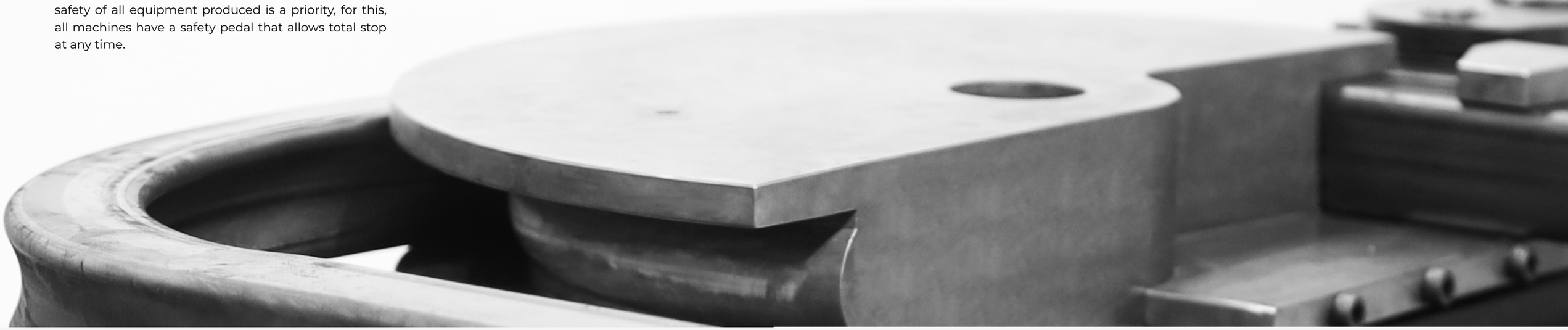

TECHNICAL CHARACTERISTICS

	PT 42	PT 76	PT 127
Maximum bending OD x Thickness (steel - 450 N/mm²)	42,0 x 3,0	76,0 x 4,0	127,0 x 3,0
Maximum centre line radius - CLR (mm)	260	300	450
Maximum bending angle (°)	190°	190°	190°
Standard bending direction	Counter Clockwise	Counter Clockwise	Counter Clockwise
Bending Y-axis maximum speed (°/s)	18	8	6
Frequency (Hz)	50	50	50
Power voltage (V)	400 ± 10%	400 ± 10%	400 ± 10%
Installed power (kW)	0,75	1,5	5,5
Setting dimensions (standard) (LxWxH - mm)	680x480x1100	760x505x1150	1270x904x1300
Machine approximate weight (standard) (kg)	270	500	1200

CREDITS BY AJP MOTOS

AMOB SECTORS

TUBE APPLICATIONS

The future with the best technology has never been so close!

There is an almost endless number of sectors that work with bend tube on a day-to-day basis! AMOB carefully studies each and every unique application, and presents the best solution for the individual customer and its sector.

Shipbuilding, Cycles/Motocycles, Agricultural Equipment, Medical, Health/ Fitness Equipment, Metal Fabrication, Heat Exchangers, Furniture and Piping Systems are some industries that take advantage of our tube bending machines, we guarantee results with the most state-of-the-art technology, maximum accuracy, and the ultimate user-friendly equipment.

Increasingly, industries are looking for efficient and sustainable solutions, with machines that really contribute to maximise productivity.

Our team seeks a stable position in the market, we are and we want to continue to be a company with the best innovative solutions. AMOB develops, designs, produces, markets and provides technical assistance. The perfect symbiosis when it comes to the world of tube bending. It is this internal capacity combined with the most advanced technical machines allows our company to serve its customers so effectively.

"Our motorcycles are recognized all over the world for their excellent quality. The choice of our suppliers must always follow these standards of excellence, we had no doubts, AMOB Group was our first choice for years of experience in this market."

António Pinto, AJP CEO

LET'S KEEP IN TOUCH

OUR SERVICES

TOOLING

Our in-house tooling design and manufacture team deals with any application that requires forming, bending or pressing! This allows us to achieve reduced delivery times and most importantly a turnkey service. We have full control over the process! 100% designed and produced by AMOB.

SPARE PARTS

Our parts for the whole world in a short period of time! AMOB has in stock more than 20 000 parts references for our customers' daily orders, from mechanical (bearings to gear boxes through electronics or even pneumatics... All of this, ready to be shipped in 24 hours time-frame and maximizing your machines availability.

REMOTE SUPPORT

Get in Touch! We are in every corner of the world with AMOB Service Center. Our team not only understand your needs but they can also anticipate them. They are in close contact with factory support team, to quickly resolve any software issue and minimize your production downtime.

HE.EN.12/22 AMOB Group®

AMOB GROUP

FORMING TECHNOLOGY SOLUTIONS

AMOB Group

+351 252 330 900 | info@amob.pt

Rua Padre Domingos Joaquim Pereira 1249
4760-563 Louro - V. N. de Famalicão
Portugal

amobgroup.com